- ALL ALUMINIUM SLIDE
- NON STANDARD SLIDES ARE AVAILABLE (CUSTOM LENGTHS/EXTENSIONS/FIXING METHODS)
- FOR APPLICATIONS COVERING SHOCK AND VIBRATION PLEASE CONTACT OUR SALES TEAM
- STANDARD LENGTHS 350MM TO 600MM IN 50MM INCREMENTS
- RoHS COMPLIANT

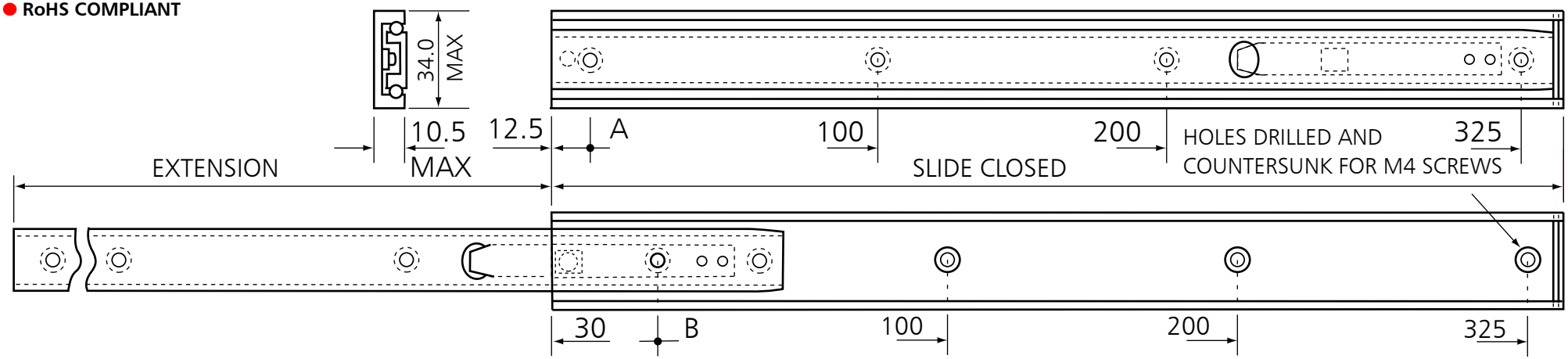

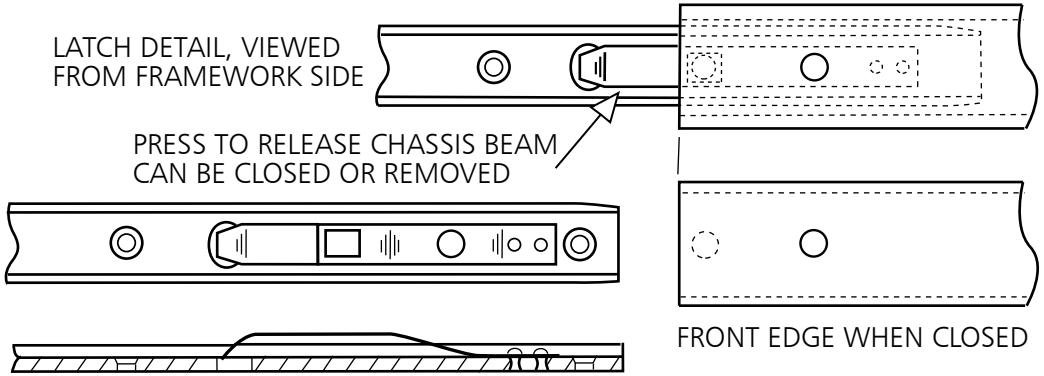

	CLOSED LENGTH	EXTENSION	CHASSIS BEAM: NO. OF FIXING HOLES	CHASSIS BEAM: DISTANCE OF SUBSEQUENT HOLES FROM A	FRAME BEAM: NO. OF FIXING HOLES	FRAME BEAM: DISTANCE OF SUBSEQUENT HOLES FROM B
*	350	262	4	100, 200, 325.	4	100, 200, 300.
	400	300	4	100, 200, 370.	5	100, 200, 300.
	450	337	5	100, 200, 275, 400.	5	100, 200, 300, 400.
	500	375	5	100, 200, 300, 470.	5	100, 200, 300, 400.
	550	412	6	100, 200, 300, 350, 500.	6	100, 200, 300, 400, 500.
	600	450	6	100, 200, 300, 400, 525.	6	100, 200, 300, 400, 500.

* DRAWN AND DIMENSIONED AS AN EXAMPLE

NOTE 1: M4 COUNTERSUNK HEAD SCREWS TO BS4183 ARE RECOMMENDED FOR FIXING

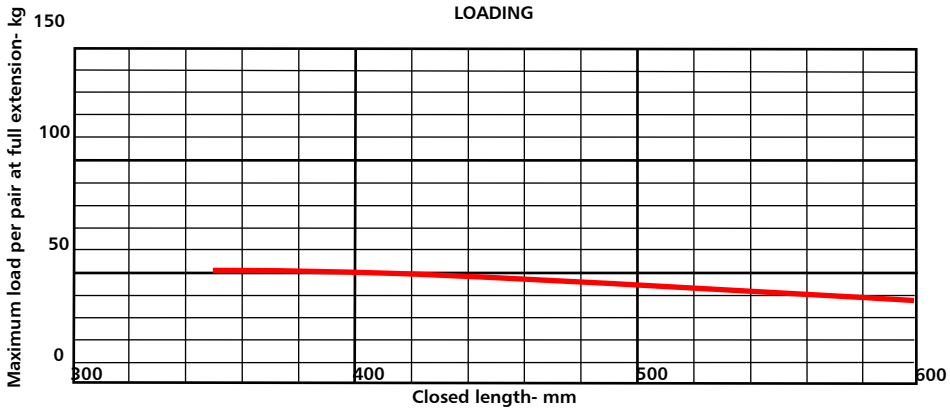

Widney Manufacturing Limited,
Plume Street, Aston, Birmingham, B6 7RX. England.
Tel: +44 (0)121 327 5500.
Fax: +44 (0)121 328 2466.
www.widney.co.uk

© Widney Manufacturing Ltd 2010