DIMENSIONS IN MM

125 SERIES SLIDE

- ALL ALUMINIUM SLIDE
- STANDARD LENGTHS 300mm TO 600mm IN 50mm INCREMENTS
- RoHS COMPLIANT
- 125 SLIDE WEIGHT 1.80Kg/M/PAIR (WITH REMOVABLE BEAM)
- 127 SLIDE WEIGHT 1.74Kg/M/PAIR
- NON STANDARD SLIDES ARE AVAILABLE (CUSTOMER LENGTHS/EXTENSION/FIXING METHODS)
- STANDARD EXTENSIONS SHOWN IN TABLE

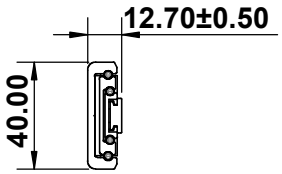

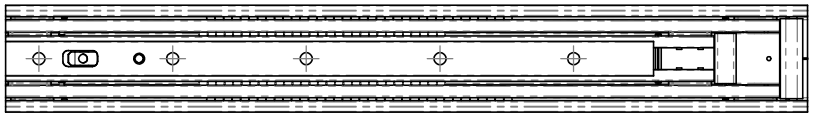

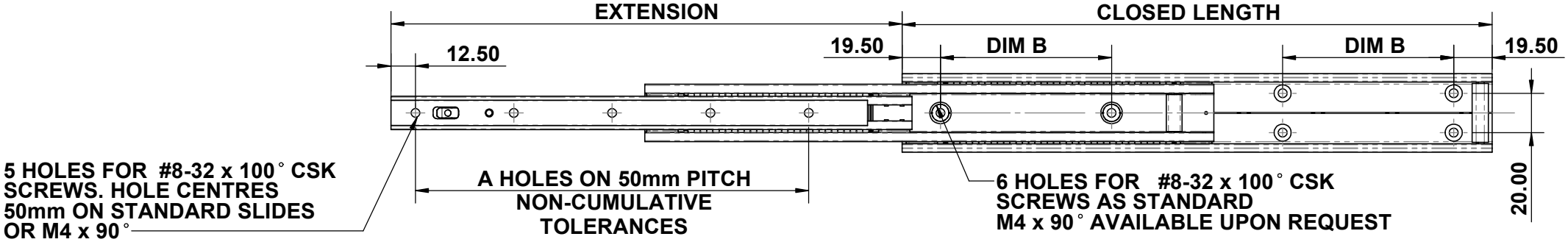

125 SERIES SLIDE STANDARD EXTENSIONS							
CLOSED LENGTH	300	350	400	450	500	550	600
EXTENSION	260	310	360	410	456	506	553
INNER BEAM No. OF HOLES ON 50mm PITCH (A)	5	6	7	8	9	10	11
DIM B	87.0	103.0	120.0	137.0	153.0	170.0	187.0

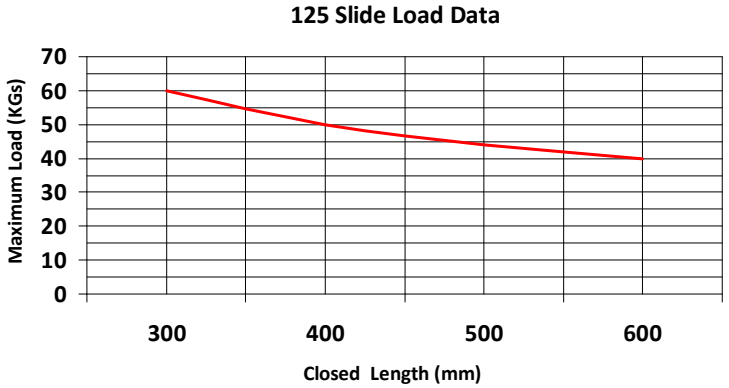

Widney Manufacturing Limited
Plume Street, Aston, Birmingham, B6 7RT England
Tel +44 (0)121 327 5500
Fax +44 (0)121 328 2466
www.widney.co.uk

© Widney Manufacturing Ltd