- ALL ALUMINIUM SLIDE
- NON STANDARD SLIDES ARE AVAILABLE (CUSTOM LENGTHS/EXTENSIONS/FIXING METHODS)
- FOR APPLICATIONS COVERING SHOCK AND VIBRATION PLEASE CONTACT OUR SALES TEAM
- STANDARD LENGTHS 300MM TO 600MM IN 50MM INCREMENTS
- RoHS COMPLIANT

ALL DIMENSIONS IN MM **120**

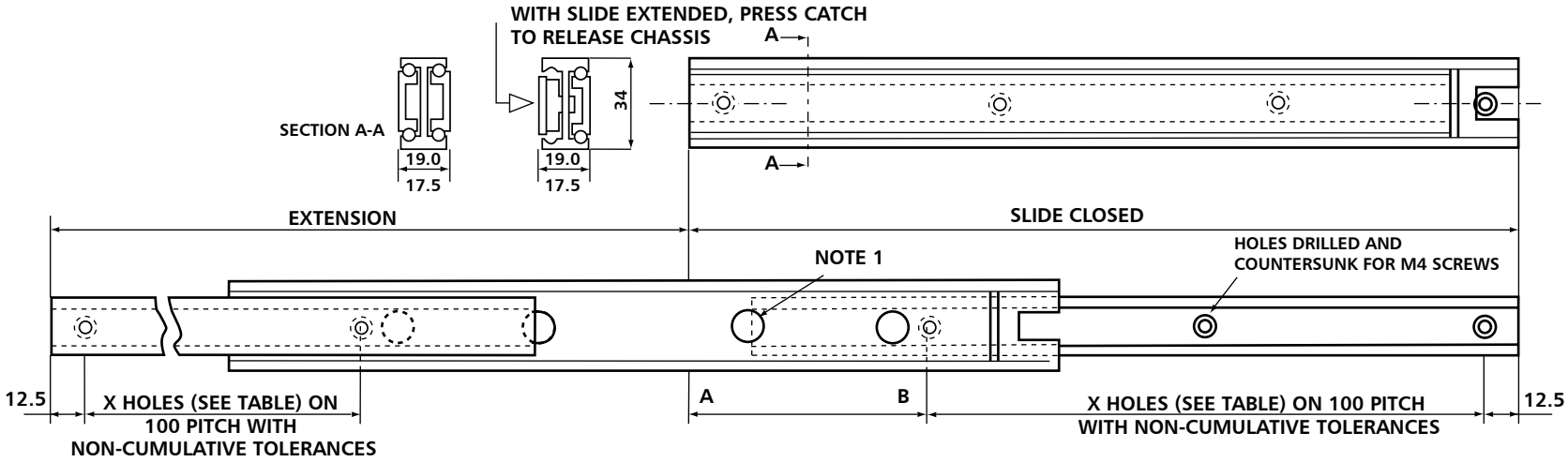

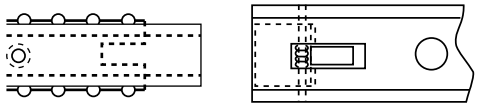

DISTANCE BETWEEN:
A- FRONT EDGE OF SLIDE CLOSED AND
B- FIXING HOLE IN FRAMEWORK BEAM
87.5 FOR SLIDES OF CLOSED LENGTHS
300 (DRAWN), 400, 500 & 600
37.5 FOR SLIDES OF CLOSED LENGTHS
350, 450 & 550

NOTE: 1. 10MM DIA HOLES IN CENTRE BEAM ALLOW EASY ACCESS TO FIXING HOLES.
M4 COUNTERSUNK HEAD SCREWS TO BS4183 ARE RECOMMENDED FOR FIXING

STANDARD LENGTHS-TYPE 120 SLIDES

CLOSED LENGTH	300	350	400	450	500	550	600
EXTENSION	330	380	430	480	530	580	630
NO. OF HOLES IN EACH BEAM (X)	3	4	4	5	5	6	6

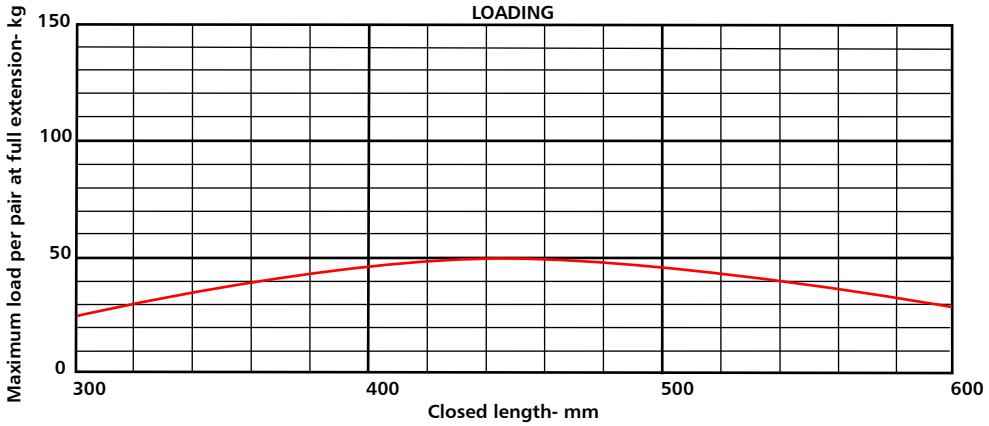

Widney Manufacturing Limited,
Plume Street, Aston, Birmingham, B6 7RX. England.
Tel: +44 (0)121 327 5500.
Fax: +44 (0)121 328 2466.
www.widney.co.uk

© Widney Manufacturing Ltd 2010