DIMENSIONS IN MM

ELECTRIC BLINDS

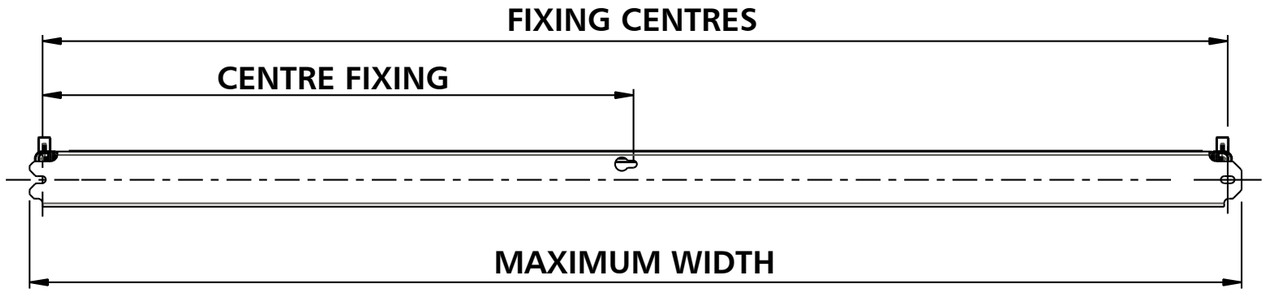

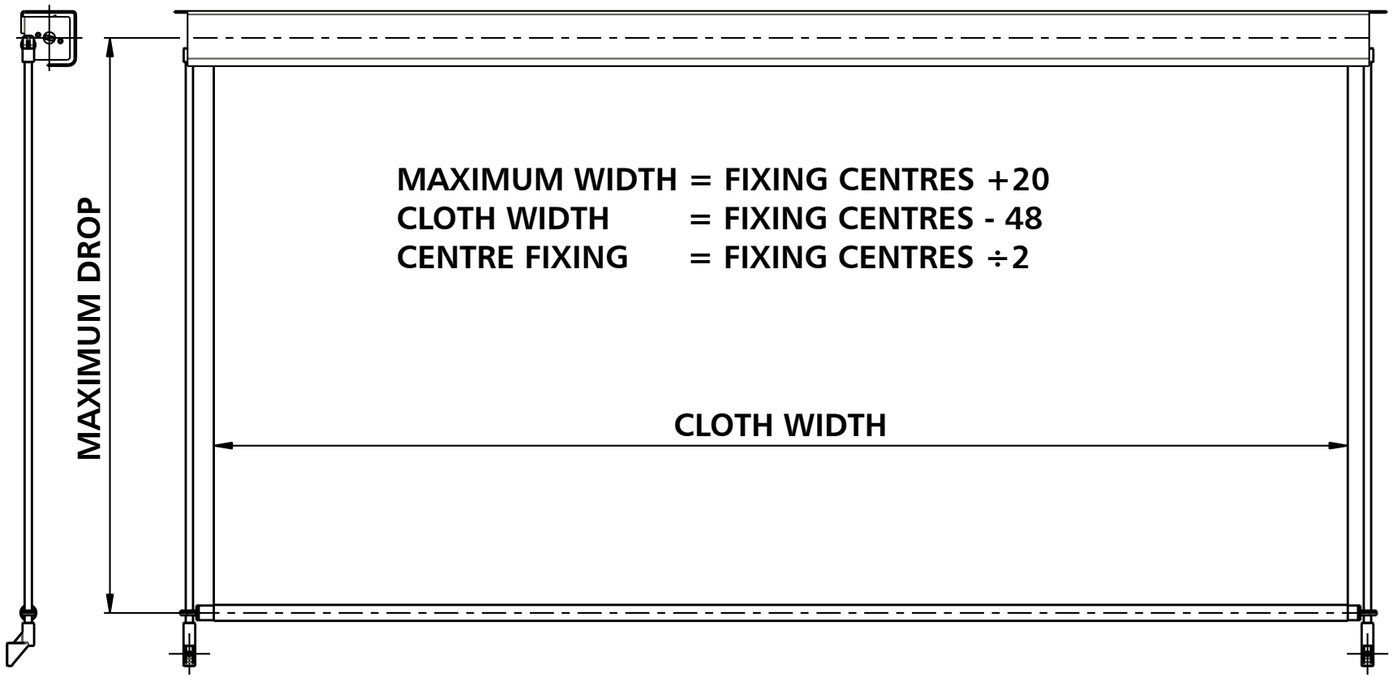

MAXIMUM WIDTH = FIXING CENTRES +20
CLOTH WIDTH = FIXING CENTRES - 48
CENTRE FIXING = FIXING CENTRES ÷2

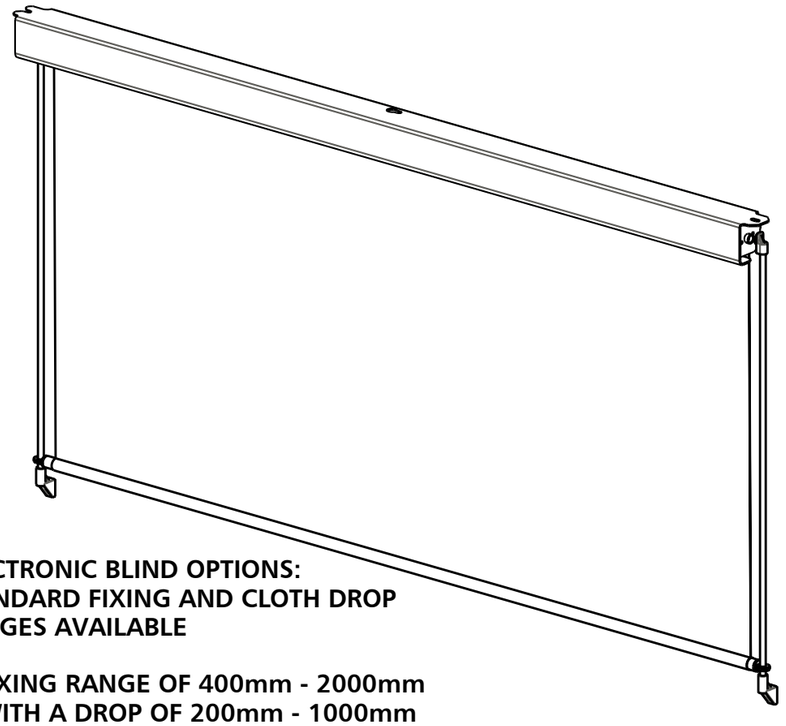

ELECTRONIC BLIND OPTIONS:
STANDARD FIXING AND CLOTH DROP RANGES AVAILABLE

- FIXING RANGE OF 400mm - 2000mm WITH A DROP OF 200mm - 1000mm
- FIXING RANGE OF 400mm - 1000mm WITH A DROP OF 200mm - 2000mm
- VERTICAL (ROOF) OR HORIZONTAL (WALL) FIXINGS
- GREY OR BLACK POWDERCOATED BACKSTRAP
- CHOOSE FROM A VARIETY OF FABRICS
- 12V OR 24V ELECTRONIC MOTOR (SPECIFICATION AVAILABLE ON REQUEST)

ROOF FIXING

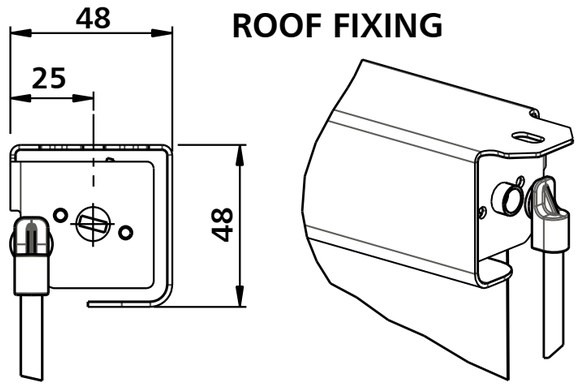

BULKHEAD FIXING

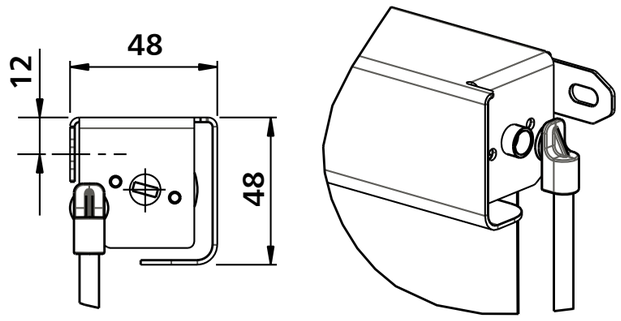

Widney Manufacturing Limited,
Plume Street, Aston, Birmingham, B6 7RX. England.
Tel: +44 (0)121 327 5500.
Fax: +44 (0)121 328 2466.
www.widney.co.uk

© Widney Manufacturing Ltd 2010