DIMENSIONS IN MM **6000**

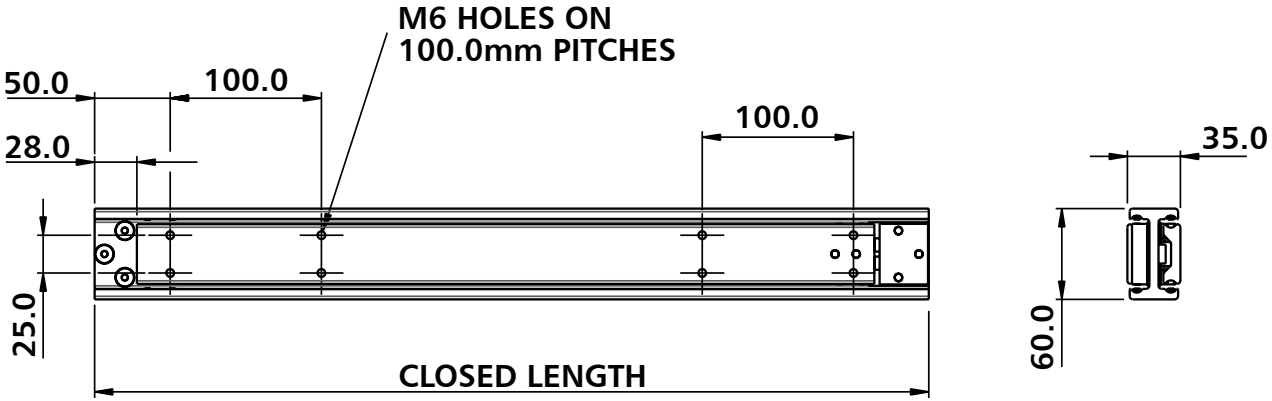

VIEW OF SLIDE WHEN CLOSED INNER/OUTER BEAMS ARE IDENTICAL

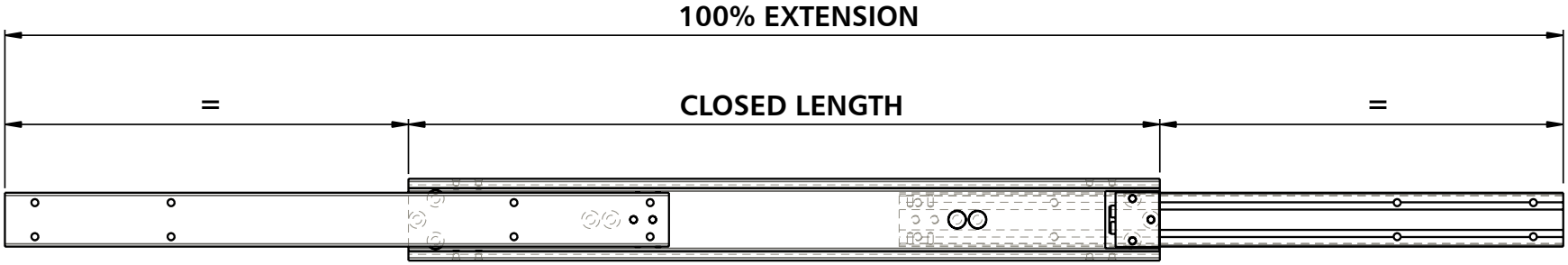

- ALL STEEL HEAVY DUTY SLIDE
- STANDARD LENGTHS 400 MM TO 1000 MM IN 50MM INCREMENTS
- RoHS COMPLIANT
- PARTIAL, FULL, OR OVER EXTENSION AVAILABLE
- FOR APPLICATIONS COVERING SHOCK AND VIBRATION CONTACT OUR SALES TEAM

CLOSED LENGTH	MAXIMUM LOAD WITH 100% SAFETY FACTOR	PULL OUT FORCE AT MAXIMUM LOAD
400MM	600KG	15KG
600MM	500KG	22KG
800MM	500KG	24KG
1000MM	450KG	25KG

Widney Manufacturing Limited,
Plume Street, Aston, Birmingham, B6 7RX. England.
Tel: +44 (0)121 327 5500.
Fax: +44 (0)121 328 2466.
www.widney.co.uk

© Widney Manufacturing Ltd 2010