ALL DIMENSIONS IN MM

5012FN

- STEEL/NYLON FRICTION SLIDE
- NON STANDARD SLIDES ARE AVAILABLE (CUSTOM LENGTHS/EXTENSIONS/FIXING METHODS)
- CAN WITHSTAND SHOCK VIBRATION PLEASE CONTACT OUR SALES TEAM
- STANDARD LENGTHS 250MM TO 600MM IN 50MM INCREMENTS
- RoHS COMPLIANT

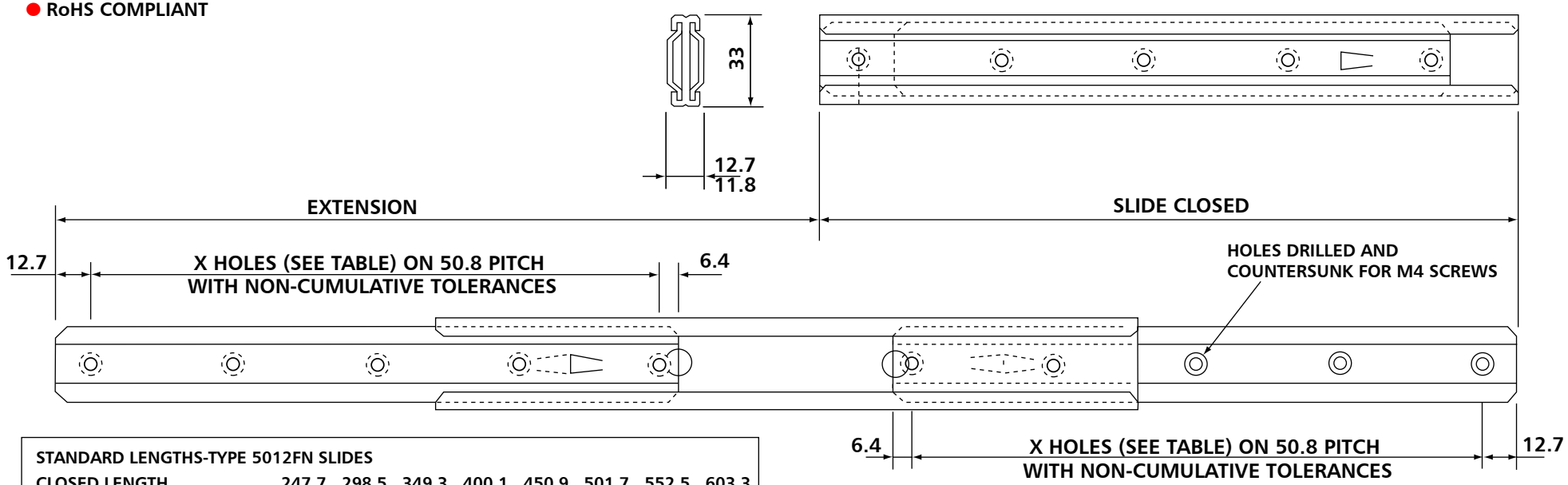

STANDARD LENGTHS-TYPE 5012FN SLIDES								
CLOSED LENGTH	247.7	298.5	349.3	400.1	450.9	501.7	552.5	603.3
EXTENSION	273.1	323.9	374.7	425.5	476.3	527.1	577.9	628.7
NO. HOLES IN EACH BEAM (X)	5	6	7	8	9	10	11	12

NOTE 1: MATING SURFACES MUST HAVE PARTIAL COUNTERSINKING TO ACCOMMODATE PROTRUDING SCREW HEADS.

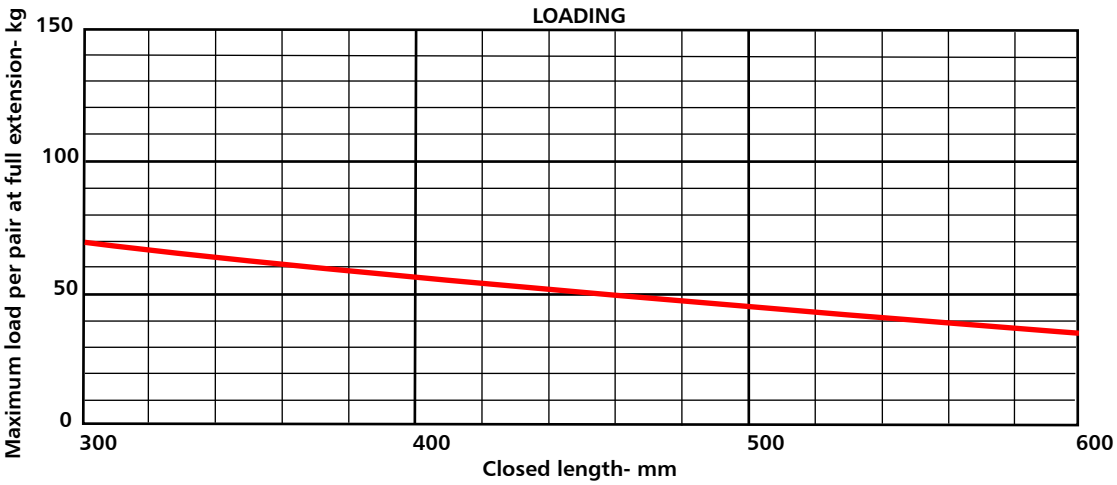

Widney Manufacturing Limited,
Plume Street, Aston, Birmingham, B6 7RX. England.
Tel: +44 (0)121 327 5500.
Fax: +44 (0)121 328 2466.
www.widney.co.uk

© Widney Manufacturing Ltd 2010