DIMENSIONS IN MM **150**

- ALL ALUMINIUM SLIDE
- STANDARD LENGTHS 300mm TO 1000mm IN 50mm INCREMENTS
- RoHS COMPLIANT
- SLIDE WEIGHT: 2.52KGS/METRE PER PAIR
- NON STANDARD SLIDES ARE AVAILABLE (CUSTOM LENGTHS/EXTENSIONS/FIXING METHODS)

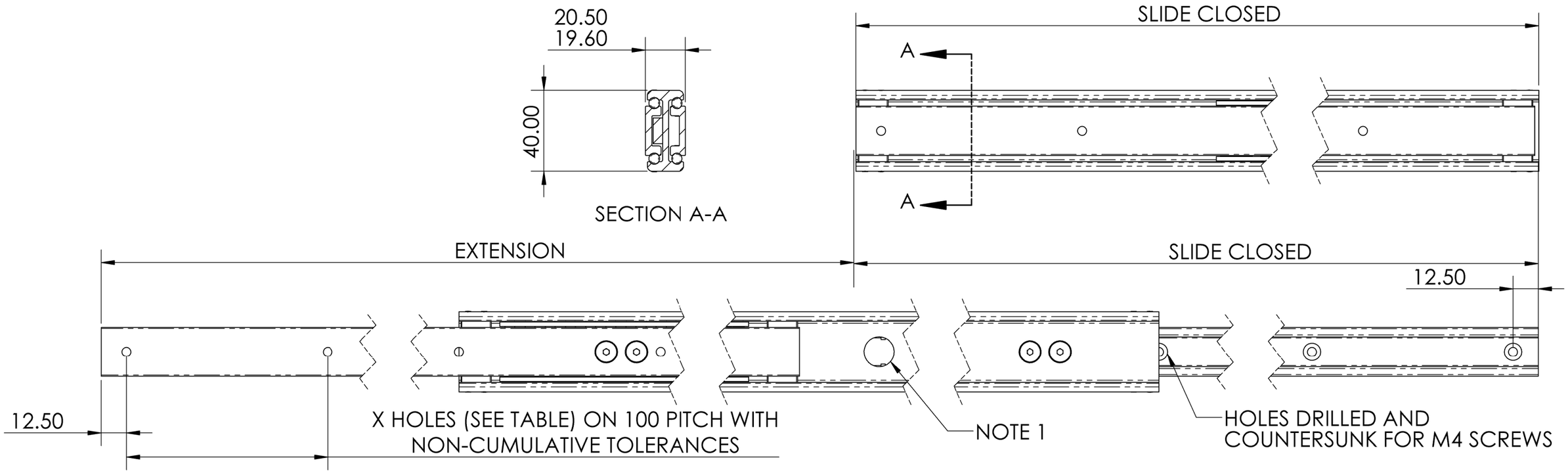

NOTE 1 15mm DIA HOLES IN CENTRE BEAM ALLOW EASY ACCESS TO FIXING HOLES.
M4 COUNTERSUNK HEAD SCREWS TO BS4183 ARE RECOMMENDED FOR FIXING

STANDARD LENGTHS-TYPE 150 SLIDES															
CLOSED LENGTH	300	350	400	450	500	550	600	650	700	750	800	850	900	950	1000
EXTENSION	325	375	425	475	525	575	625	675	725	775	825	875	925	975	1025
NO. HOLES IN EACH BEAM (X)	3	4	4	5	5	6	6	7	7	8	8	9	9	10	10

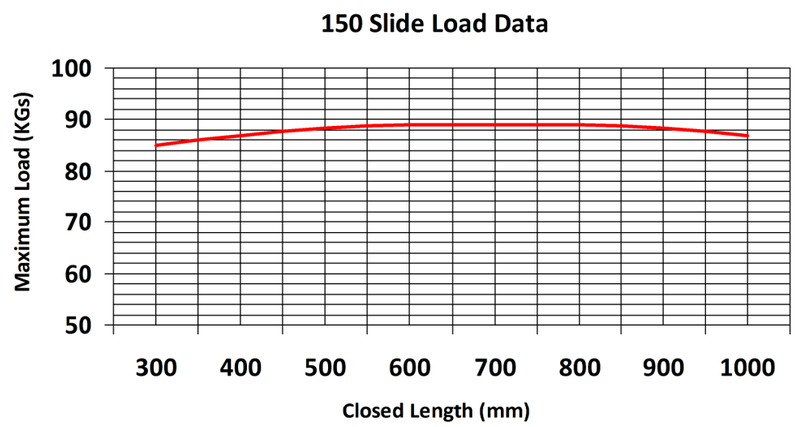

Widney Manufacturing Limited
Plume Street, Aston, Birmingham, B6 7RT England
Tel +44 (0) 121 327 5500
Fax +44 (0) 121 328 2466
www.widney.co.uk

©Widney Manufacturing Ltd